SCANGRIP®
UV CURING

UV CURING

NEW

WORLD'S MOST POWERFUL
LIGHTS FOR UV CURING

ORIGINAL SCANGRIP
SINCE 1906
MADE IN DENMARK

WORLD'S MOST POWERFUL CURING LIGHTS

// SCANGRIP provides the strongest and most comprehensive range of LED work lights on the market. The automotive body and paint repair industry keeps requesting UV solutions capable of curing larger areas faster. To meet this demand, SCANGRIP has now developed 2 new superior, and extremely powerful LED solutions for UV curing to perform fast and high-quality curing of any body and paint repair.

The 2 new UV CURING lights will be more than 3 and 6 times as powerful, respectively, as the present UV lights, and will be the far most powerful UV lights in the world!

- Fast curing of very large areas
- Built-in timer
- Controlled remotely by APP
- No heat generation
- Made in Denmark

COLD CURING technology

// No heat is produced on the panel or the paint during the curing

// Allows curing of plastic parts or any heat sensitive material

// Sanding and polishing can be done immediately after the curing is completed

The automotive coatings technology is continuously developing new fast cost-effective methods for automotive body and paint repair. Utilizing UV LED curing technology allows you to work faster and more efficiently as the curing time between each operation is reduced significantly. The range of LED solutions for UV curing is applicable for curing of UV cured primers and UV cured body fillers.

3 years warranty

PATENT PROTECTED

// Smart and easy operation with user-friendly APP

The built-in BLUETOOTH functionality makes it safe and easy to operate the lamp remotely, even in groups of up to 4 units simultaniously. Using the APP provides safe activation from a distance to avoid being physically close to the UV curing process.

The APP continuously visualizes the remaining curing time.

Bluetooth®

BLUETOOTH - Light control app

- Set operating time between 1 and 9 minutes
- Adjust operating time without switching off the lamp
- Grouping of up to 4 units and control as one unit

Compliant with iPhone 5 or higher / Android 5.0 or higher. Go to iTunes App Store to download the app or download the app from scangrip.com

COMPATIBILITY

SCANGRIP specialized LED work lights for UV CURING has been tested and proven successfully on leading brands of UV-cured products.

Scan the QR code

3 years warranty

PATENT PROTECTED

Designed by us. Manufactured by us.

ORIGINAL SCANGRIP
SINCE 1906
MADE IN DENMARK

UV-EXTREME & UV-EXTREME PLUS

// The 2 new EXTREME curing lights are actively cooled to maximize the UV output with a minimal size of the product.

UV-EXTREME

€ 1999.90 UV

03.5272

Extremely powerful LED work light for very fast and highly efficient UV curing of large paint repair areas, up to approximately 100 x 100 cm

Curing diameter: ø 22 cm
Min. irradiance: >80 mW/cm2
Center irradiance: 395 mW/cm2
Curing area: 380m²

10 cm

Curing diameter: ø 90 cm
Min. irradiance: >6 mW/cm²
Center irradiance: 35 mW/cm²
Curing area: 6300 cm²

40 cm

Curing diameter: ø 95 cm
Min. irradiance: >6 mW/cm²
Center irradiance: 16 mW/cm²
Curing area: 7000 cm²

60 cm

The 2 UV-EXTREME work lights are packed in sturdy and high-quality cases that can withstand shocks and rough handling during shipment. The cases have a built-in handle. When the lights are not in use, the transport case can be used to store the lamp.

3 years warranty

PATENT PROTECTED

Expected availability 1st November 2022

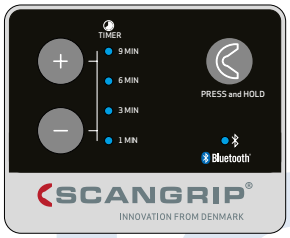

Built-in timer and Bluetooth

Bluetooth®

BLUETOOTH - Light control app

- Set operating time between 1 and 9 minutes
- Adjust operating time without switching off the lamp
- Grouping of up to 4 units and control as one unit

Compliant with iPhone 5 or higher / Android 5.0 or higher. Go to iTunes App Store to download the app or download the app from scangrip.com

UV-EXTREME PLUS

€ 2999.90 UV

03.5273

Superior and most powerful LED work light in the world for very fast and highly efficient UV curing of larger paint repair areas, up to 135 x 130 cm, equivalent to the size of a car door

Curing size: 34 x 24 cm
Min. irradiance: >120mW/cm²
Center irradiance: 490mW/cm²
Curing area: 640 cm²

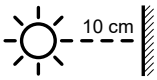

Curing size: 110 x 100 cm
Min. irradiance: >6 mW/cm²
Center irradiance: 68 mW/cm2
Curing area: 8600 cm²

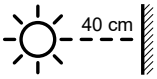

Curing size: 135 x 130 cm
Min. irradiance: >6 mW/cm²
Center irradiance: 18 mW/cm²
Curing area: 13000 cm²

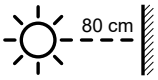

Expected availability 1st November 2022

FLEXIBLE POSITIONING ON WHEEL STAND

ORIGINAL SCANGRIP
SINCE 1906

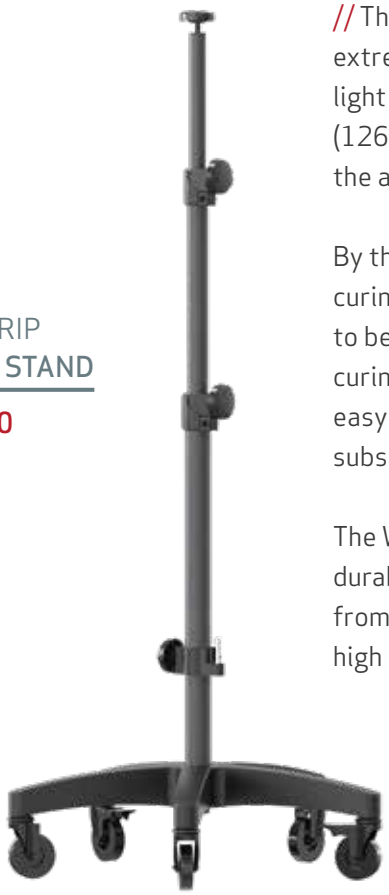

SCANGRIP
WHEEL STAND

€ 139.90

03.5682

// The SCANGRIP WHEEL STAND will be the perfect stand for the 2 extremely powerful curing lights. You will be able to mount the work light on top of the stand and position the light in the requested height (1260-2300 mm). Mounted in the bracket you will also be able to adjust the angle to obtain optimum curing effect on the subject to be cured.

By the app you will be able to control the curing proces remotely and do not have to be close to the UV irridiance. When the curing process is finished it is fast and easy to move it aside to make room for the subsequent repair work.

The WHEEL STAND is a very stable and durable construction easy to move around from job to job. The 5-wheel base ensures high stability and easy maneuverability.

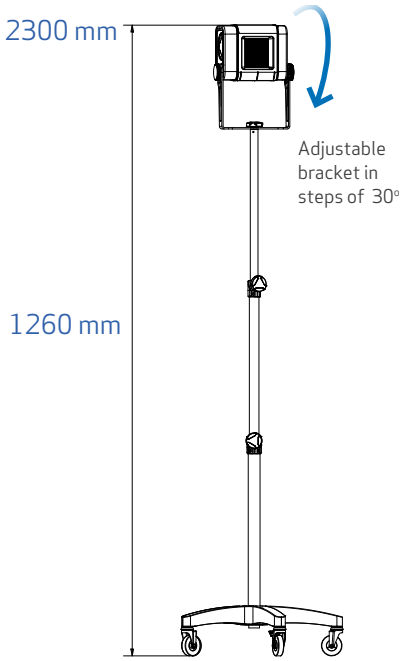

MOUNTING BRACKET
for **UV-EXTREME**

€ 49.90

03.5915

NEW

// Sometimes it is necessary to cure on lower parts of the vehicle or on the side, for instance. For this purpose we recommend to use the bracket of the WHEEL STAND center bar which is adjustable in the height (380-895 mm). To fix the UV-EXTREME or UV-EXTREME PLUS at the lower part of the WHEEL STAND you need this additional MOUNTING BRACKET as accessory.

Expected availability 1 November 2022

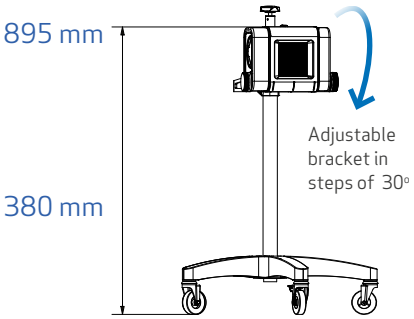

TECHNICAL SPECIFICATIONS

UV	UV-EXTREME NEW	UV-EXTREME PLUS NEW
Product number	03.5272	03.5273
Light source	UV LED	UV LED
Irradiance	At 60 cm distance Curing diameter: ø 95 cm Min. irradiance: >6 mW/cm² Center irradiance: 16 mW/cm² At 40 cm distance Curing diameter: ø 90 cm Min. irradiance: >6 mW/cm² Center irradiance: 35 mW/cm² At 10 cm distance Curing diameter: ø 22 cm Min. irradiance: >80 mW/cm² Center irradiance: 398 mW/cm²	At 80 cm distance Curing size: 135x130 cm Min. irradiance: >6 mW/cm² Center irradiance: 18 mW/cm² At 40 cm distance Curing size: 110x100 cm Min. irradiance: >6 mW/cm² Center irradiance: 68 mW/cm² At 10 cm distance Curing size: 34x24 cm Min. irradiance: >120mW/cm² Center irradiance: 490mW/cm²
Curing area	7000 cm² at 60 cm distance 6300 cm² at 40 cm distance 380 cm² at 10 cm distance	13000cm² at 80 cm distance 8600cm² at 40 cm distance 640cm² at 10 cm distance
Wavelength	395-400nm	395-400nm
Protection class	IP30	IP30
Impact protection	IK08	IK08
Impact resistance	1 m	1m
Cable	5 m / 2x1.0 mm2 H05RN-F	5 m / 2x1.0 mm2 H05RN-F
Operating voltage AC	220-240 V	220-240 V
Charging voltage/current DC	-	-
Power consumption	300 W	600 W
Temperature	-10° to +40°C	-10° to +40°C
Dimensions	278 x 241 x 160 mm	415 x 241 x 160 mm
Net weight	4.95 kg	6.70 kg
Price	€ 1999.90	€ 2999.90

RISK GROUP 3

Verified UV protection face visor is included

OTHER UV PRODUCTS

See our other portable lights for fast curing

Designed by us. Manufactured by us.

SCANGRIP®
UV CURING

// SCANGRIP is Europe's leading manufacturer of work lights for professionals providing the strongest and most comprehensive ranges of work lights with the latest LED lighting technology available on the market.

SCANGRIP is innovation from Denmark and receives strong recognition in the marketplace for its product design, and the products are known for their high quality.

SCANGRIP strives for perfection, and is continuously optimizing and improving light output, battery capacity, design and ergonomics, durability, user-friendliness, and functionality. The aim is to set new standards for professional work lights.

SCANGRIP was established in 1906 and has a long, impressive history of manufacturing high-quality hand tools and work lights for the industrial, construction, and automotive sectors.

SCANGRIP is part of Hultafors Group - a global company offering a unique portfolio of premium brands within personal protection, tools, and other equipment for discerning craftsmen. Together, we are on a mission to create a better day for professional users.

SCANGRIP.COM

All prices are gross prices, VAT exclusive and subject to change without notice, errors and omissions excepted.

UV-CURING-EXTREME-UK-2022-1

// SCANGRIP A/S Rytterhaven 9 DK-5700 Svendborg DENMARK Tel +45 6320 6320 scangrip@scangrip.com